Electrolux PROFESSIONAL

High Productivity Cooking Electric Rectangular Boiling Pan, 80lt, Freestanding + Tap

ITEM #

MODEL #

NAME #

SIS #

AIA #

586525 (PBEN08EGEM) Electric Boiling Pan 80lt (s), rectangular with mixing tap, GuideYou panel, freestanding

Short Form Specification

Item No.

AISI 304 stainless steel construction. Vessel with rounded edges in AISI 316 stainless steel. Insulated and counterbalanced lid. Water mixing unit included. Unit to include food tap.Food is uniformly heated via the base and the side walls of the pan by an indirect heating system using integrally generated saturated steam at a maximum temperature of 125°C in a jacket with an automatic deaeration system. Safety valve avoids overpressure of the steam in the jacket. Safety thermostat protects against low water level in the double jacket. TOUCH control panel. SOFT function. Possibility to store recipes in single or multiphase cooking process, with different temperature settings. Built in temperature sensors for precise control of cooking process. IPX6 water resistant. Configuration: Free-standing or Standing against a wall. Installation options (not included): floor mounted on 100mm high feet or a plinth which can be either steel or masonry construction.

APPROVAL:

Main Features

- Kettle is suitable to boil, steam, poach, braise or simmer all kinds of produce.
- Square inner kettle allows working with stacked Gastronorm containers, which facilitate loading and unloading operations.
- Large capacity food tap enables safe and effortless discharging of contents.
- Isolated upper well rim avoids risk of harm for the user.
- Discharge tap is very easy to disassemble and clean.
- IPX6 water resistant.
- Built in temperature sensor to precisely control the cooking process.
- USB connection to easily update the software, upload/download recipes and download HACCP data.

Construction

- Cooking vessel in 1.4435 (AISI 316L) stainless steel. Double-jacket in 1.4404 (AISI 316L) stainless steel designed to operate at a pressure of 1.5 bar.
- External panelling and internal frame made of 1.4301 (AISI 304) stainless steel.
- Safety valve avoids overpressure of the steam in the double jacket.
- 2" diameter discharge tap for rapid emptying of the well.
- Minimised presence of narrow gaps for easier cleaning of the sides to meet the highest hygiene standards.
- Integrated water mixing tap to make water filling and pan cleaning operations easier.
- Can be prearranged for energy optimisation or external surveillance systems (optional).
- GuideYou Panel - activated by the user via settings – to easily follow the multiphase recipes, granting a proper and controlled cooking and a better appliance optimization. The system will provide maintenance reminders, in line with ESSENTIA program, helping the user to properly take care of the product, avoiding downtimes.
- Highly-visible and bright led TOUCH control panel features user-friendly icons and intuitive self-explanatory command options. Display visualizes:
  - Actual and set temperature
  - Set and remaining cooking time
  - Pre-heating phase (if activated)
  - GuideYou Panel (if activated)
  - Deferred start
  - Soft Function to reach the target temperature smoothly

- 9 Power Control levels from simmering to fierce boiling
- Pressure mode (in pressure models)
- Stirrer ON/OFF settings (in round boiling models)
- Error codes for quick trouble-shooting
- Maintenance reminders

User Interface & Data Management

- Connectivity ready for real time access to connected appliances from remote and data monitoring (requires optional accessory – contact the Company for more details).

Sustainability

- High-quality thermal insulation of the pan saves energy and keeps operating ambient temperature low.

Optional Accessories

• Strainer for dumplings for all tilting & stationary braising and pressure braising pans (except 80lt) and for all stationary rectangular and 100lt round boiling pans	PNC 910053	❑
• Scraper for dumpling strainer for boiling and braising pans	PNC 910058	❑
• Base plate for 80lt rectangular boiling pans	PNC 910181	❑
• Suspension frame GN1/1 for rectangular boiling and braising pans	PNC 910191	❑
• Manometer kit for stationary boiling pans - long - factory fitted	PNC 912120	❑
• Power Socket, CEE16, built-in, 16A/400V, IP67, red-white - factory fitted	PNC 912468	❑
• Power Socket, CEE32, built-in, 32A/400V, IP67, red-white - factory fitted	PNC 912469	❑
• Power Socket, SCHUKO, built-in, 16A/230V, IP68, blue-white - factory fitted	PNC 912470	❑
• Power Socket, TYP23, built-in, 16A/230V, IP55, black - factory fitted	PNC 912471	❑
• Power Socket, TYP25, built-in, 16A/400V, IP55, black - factory fitted	PNC 912472	❑
• Power Socket, SCHUKO, built-in, 16A/230V, IP55, black - factory fitted	PNC 912473	❑
• Power Socket, CEE16, built-in, 16A/230V, IP67, blue-white - factory fitted	PNC 912474	❑
• Power Socket, TYP23, built-in, 16A/230V, IP54, blue - factory fitted	PNC 912475	❑
• Power Socket, SCHUKO, built-in, 16A/230V, IP54, blue - factory fitted	PNC 912476	❑
• Power Socket, TYP25, built-in, 16A/400V, IP54, red-white - factory fitted	PNC 912477	❑
• Measuring rod and strainer for 80lt stationary rectangular boiling pans	PNC 912480	❑
• Connecting rail kit, 900mm	PNC 912502	❑
• Set of 4 feet for stationary units (height 100mm) - factory fitted	PNC 912701	❑
• Stainless steel plinth for stationary units - freestanding - factory fitted	PNC 912710	❑
• Automatic water filling (hot and cold) for stationary units (width 700-1000mm): rectangular pressure boiling and braising pans - factory fitted	PNC 912736	❑
• Kit energy optimization and potential free contact - factory fitted	PNC 912737	❑
• External touch control device for stationary units - factory fitted	PNC 912783	❑
• Connecting rail kit: modular 90 (on the left) to ProThermetic tilting (on the right), ProThermetic stationary (on the left) to ProThermetic tilting (on the right)	PNC 912975	❑
• Connecting rail kit: modular 80 (on the right) to ProThermetic tilting (on the left), ProThermetic stationary (on the right) to ProThermetic tilting (on the left)	PNC 912976	❑
• Kit endrail and side panels, flush-fitting, left - factory fitted	PNC 913400	❑
• Kit endrail and side panels, flush-fitting, right - factory fitted	PNC 913401	❑
• Kit endrail and side panel (12.5mm), for installation thermaline 90 modular 800 mm high with ProThermetic stationary, left – factory fitted	PNC 913424	❑
• Kit endrail and side panel (12.5mm), for installation thermaline 90 modular 800 mm high with ProThermetic stationary, right – factory fitted	PNC 913425	❑
• Drain standpipe for boiling pans (PBEN08)	PNC 913428	❑
• Kit endrail and side panels, flush-fitting, for back-to-back installation, left - factory fitted	PNC 913489	❑
• Kit endrail and side panels, flush-fitting, for back-to-back installation, right - factory fitted	PNC 913490	❑
• Kit endrail and side panel (12.5mm), for installation with backsplash, left - factory fitted	PNC 913501	❑
• Kit endrail and side panel (12.5mm), for installation with backsplash, right - factory fitted	PNC 913502	❑
• Connectivity kit for ProThermetic Boiling and Braising Pans ECAP - factory fitted	PNC 913577	❑

The company reserves the right to make modifications to the products without prior notice. All information correct at time of printing.

2024.10.06

High Productivity Cooking Electric Rectangular Boiling Pan, 80lt, Freestanding + Tap

Front

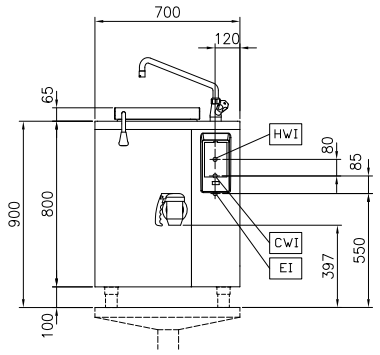

Side

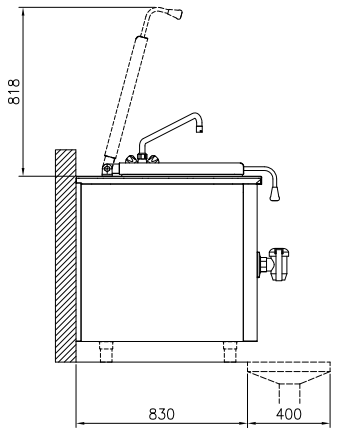

CWI1 = Cold Water inlet 1 (cleaning)
EI = Electrical inlet (power)
HWI = Hot water inlet

Top

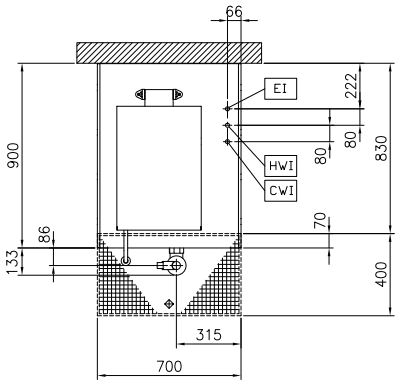

Electric

Supply voltage:	
586525 (PBEN08EGEM)	400 V/3N ph/50/60 Hz
Total Watts:	18.2 kW

Installation:

Type of installation:	FS on concrete base;FS on feet;On base;Standing against wall

Key Information:

Configuration:	Rectangular;Fixed
Working Temperature MIN:	50 °C
Working Temperature MAX:	110 °C
Vessel (rectangle) width:	356 mm
Vessel (rectangle) height:	461 mm
Vessel (rectangle) depth:	556 mm
External dimensions, Width:	700 mm
External dimensions, Depth:	900 mm
External dimensions, Height:	800 mm
Net weight:	150 kg
Net vessel useful capacity:	80 lt
Double jacketed lid:	✓
Heating type:	Indirect

The company reserves the right to make modifications to the products without prior notice. All information correct at time of printing.